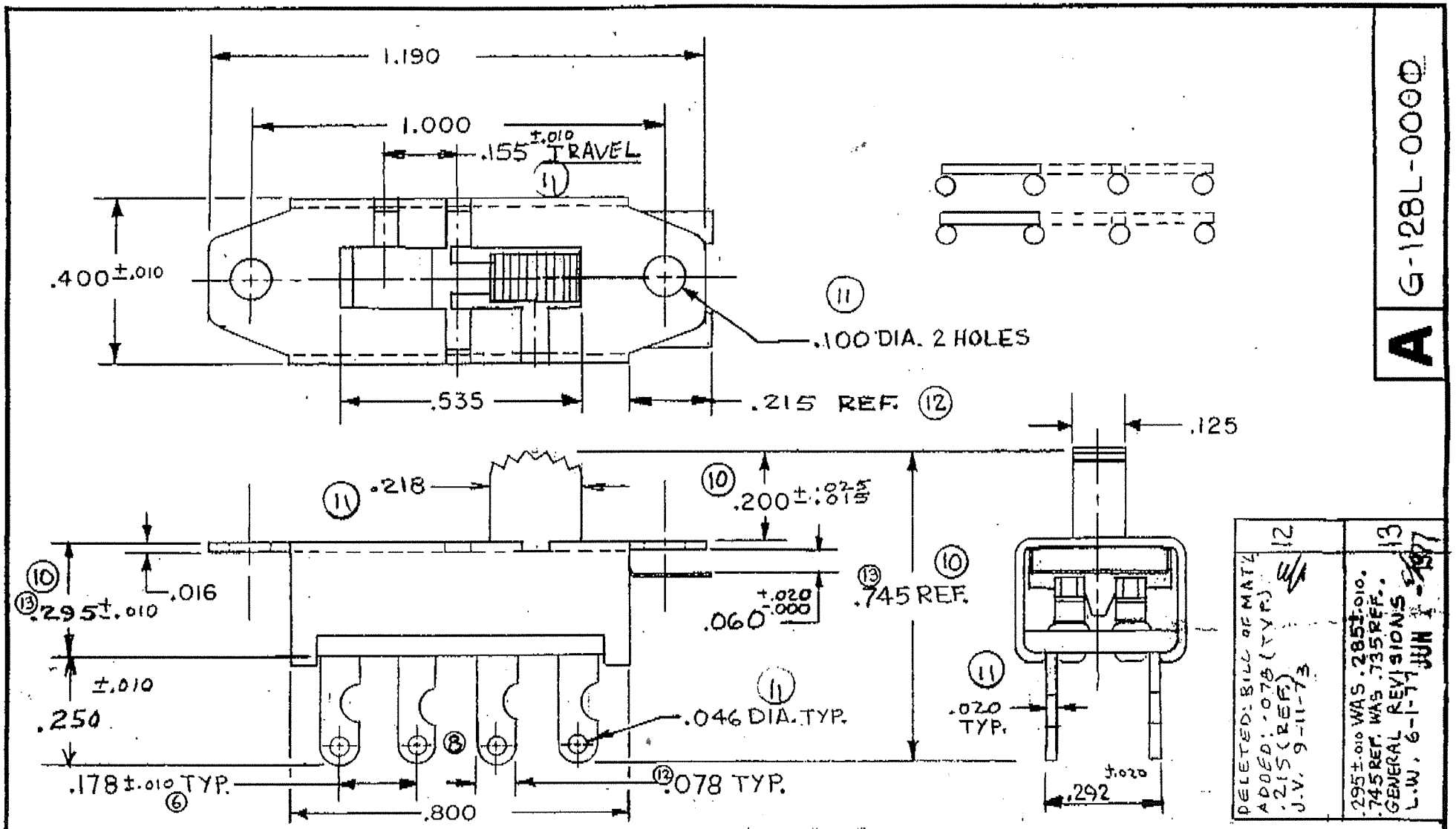

ALL SCREW THREADS TO BE CLASS 2 FIT (AMERICAN STANDARDS) UNLESS OTHERWISE SPECIFIED. DIMENSIONS ARE IN INCHES, AND INCLUDE THICKNESS OF PLATING. DO NOT SCALE DRAWING.

REVISIONS

0	ENG. AP. 8-1-63
1	ADDED ±.010 TOL. TO .300 DIM. 9-4-63 V.A.B.
2	ADDED NOTE 12-10-63 VAB
3	CHANGED DETENT HOLES TO 32 DPS 3-23-64 D.F.V.
4	G-128-S WAS G-128, G-128-L WAS G-128-1 6-5-64 J.V.S. ETO
5	WAS G-128-S. ADDED .060 R 5-3-66
6	WAS ±.002 1-20-67
7	.292 WAS .338 4-4-68
8	REVISED TERMS P.S. 2-5-70 E/O
9	G-128L-0000 WAS G-128-L P.S. 8-11-70
10	DELETED .300 +.025 -.015 WAS ±.010 (REF.) WAS ±.020 ADDED .285 ±.010 J.V. 7-17-73
11	GENERAL REVIS. J.V. 7-23-73
12	DELETED: BILL OF MATL ADDED: .078 (TYP.) .215 (REF.) J.V. 9-11-73
13	.295 ±.010 WAS .285 ±.010. .745 REF. WAS .735 REF.. GENERAL REVISIONS L.W. 6-1-77

JUN 1 - 1977

JUL 30 1973

PDF File Made

VARIATIONS ON FINISHED DIMENSIONS UNLESS OTHERWISE MARKED

BASIC DIMENSIONS	FRACTIONAL DIMENSIONS	DECIMAL DIMENSIONS
UP TO 6	± 1/64	± .005
ABOVE 6 TO 24	± 1/32	± .010
ABOVE 24	± 1/16	± .015
ANGULAR DIMENSIONS		± 1/2°

SWIDGET

2 P. - 3 POS.

FIRST MADE FOR

DRAWN BY D.F.V. 3-23-64

CHECKED BY

Continental-Wirt Electronics Corp.

G-128L-0000

W11A