DIMENSIONS IN INCHES (MILLIMETERS)
DO NOT SCALE DRAWING .....

Dwg. No.
G-128L-0102

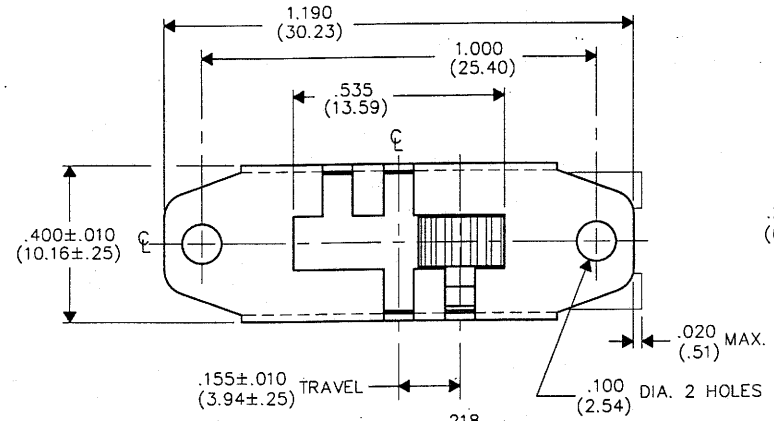

P.C. LAYOUT

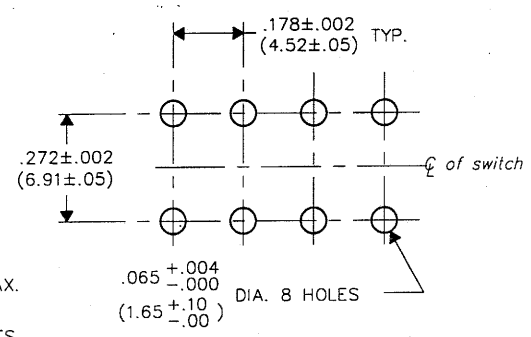

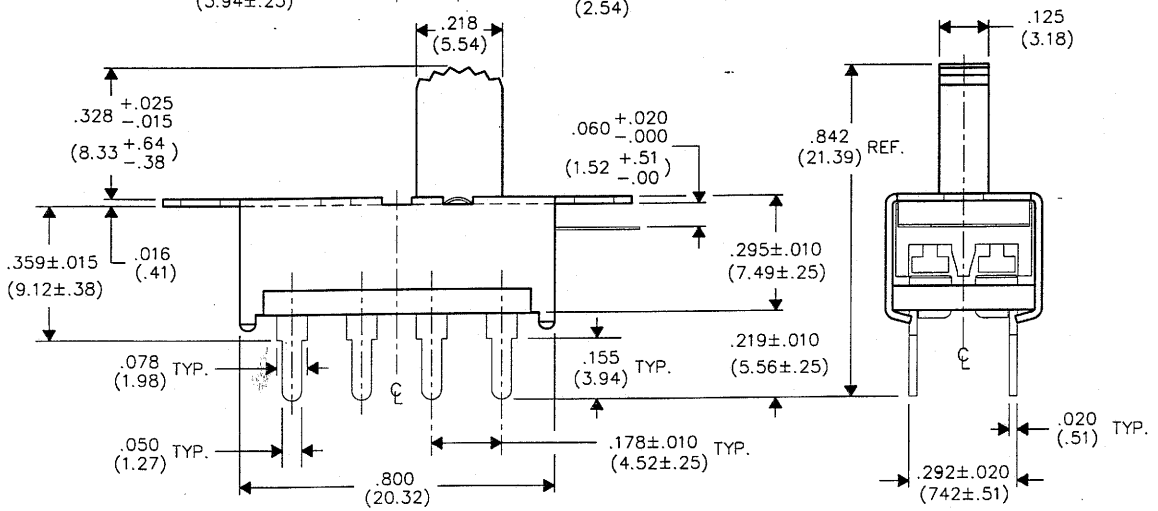

REVISIONS		
0	RELEASED. DGW 5-08-2001	

FORM-B4

PDF File Made

CW INDUSTRIES
Southampton, Pa. 18966

TOLERANCES UNLESS OTHERWISE SPECIFIED	
2 Place Decimal ±.010	METRIC
3 Place Decimal ±.005	1 Place Dec. ±.25mm
Angles ..... ±1°	2 Place Dec. ±.13mm

Made for: CW IND.
Drawn by: DGW 5-08-2001
Checked by: G Gould 5-8-01
Approval:

Title: ASSEMBLY SWIDGET D.P.- 3 POS.

Division: SWITCH

Dwg. No. G-128L-0102