DIMENSIONS IN INCHES (MILLIMETERS)
DO NOT SCALE DRAWING .....

Dwg. No. G-173-0014

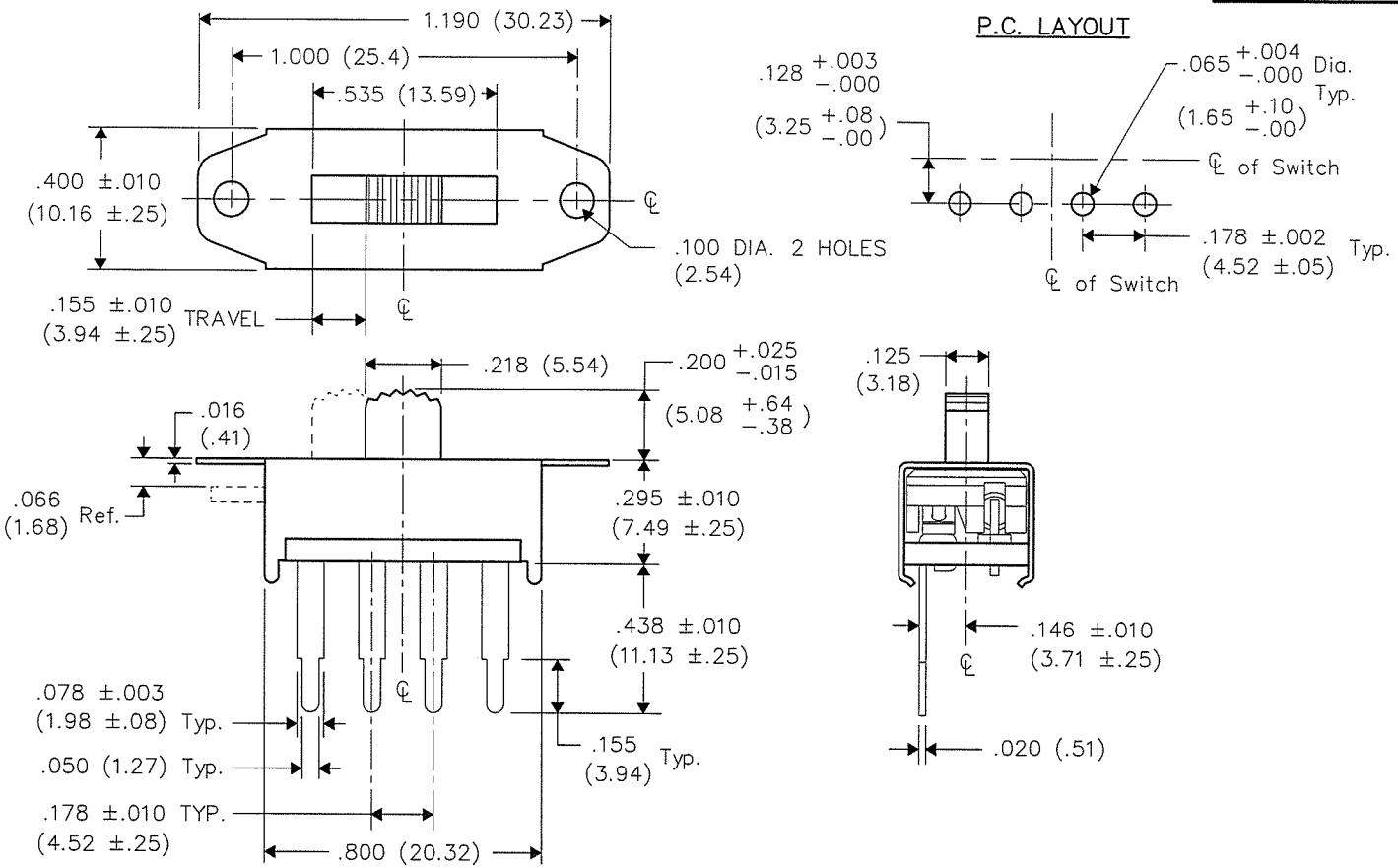

P.C. LAYOUT

THIS INFORMATION IS CONFIDENTIAL AND PROPRIETARY TO CW INDUSTRIES INCORPORATED AND ITS AFFILIATES. IT MAY NOT BE DISCLOSED TO ANYONE, OTHER THAN CW INDUSTRIES PERSONNEL, WITHOUT WRITTEN AUTHORIZATION FROM CW INDUSTRIES INCORPORATED, SOUTHAMPTON, PENNSYLVANIA USA.

B-FORMAT 2002

REVISIONS

0	RELEASED. DGW 5-16-17

PDF MADE

CW INDUSTRIES
Southampton, Pa. 18966

TOLERANCES UNLESS OTHERWISE SPECIFIED

	METRIC
2 Place Decimal ±.010	1 Place Dec. ±.25mm
3 Place Decimal ±.005	2 Place Dec. ±.13mm
Angles ..... ±1°	

Made for: CW IND.
Drawn by: DGW 5-16-17
Checked by: G.GULD 5-16-17
Approval: C.Hiers 5/16/17

Title: SLIDE SWITCH ASSEMBLY S.P. / 3P

Division: SWITCH

Dwg. No. G-173-0014