DIMENSIONS IN INCHES (METRIC-MILLIMETERS)
DO NOT SCALE DRAWING..

Drawing Number
G-2011-0000

PANEL PIERCING

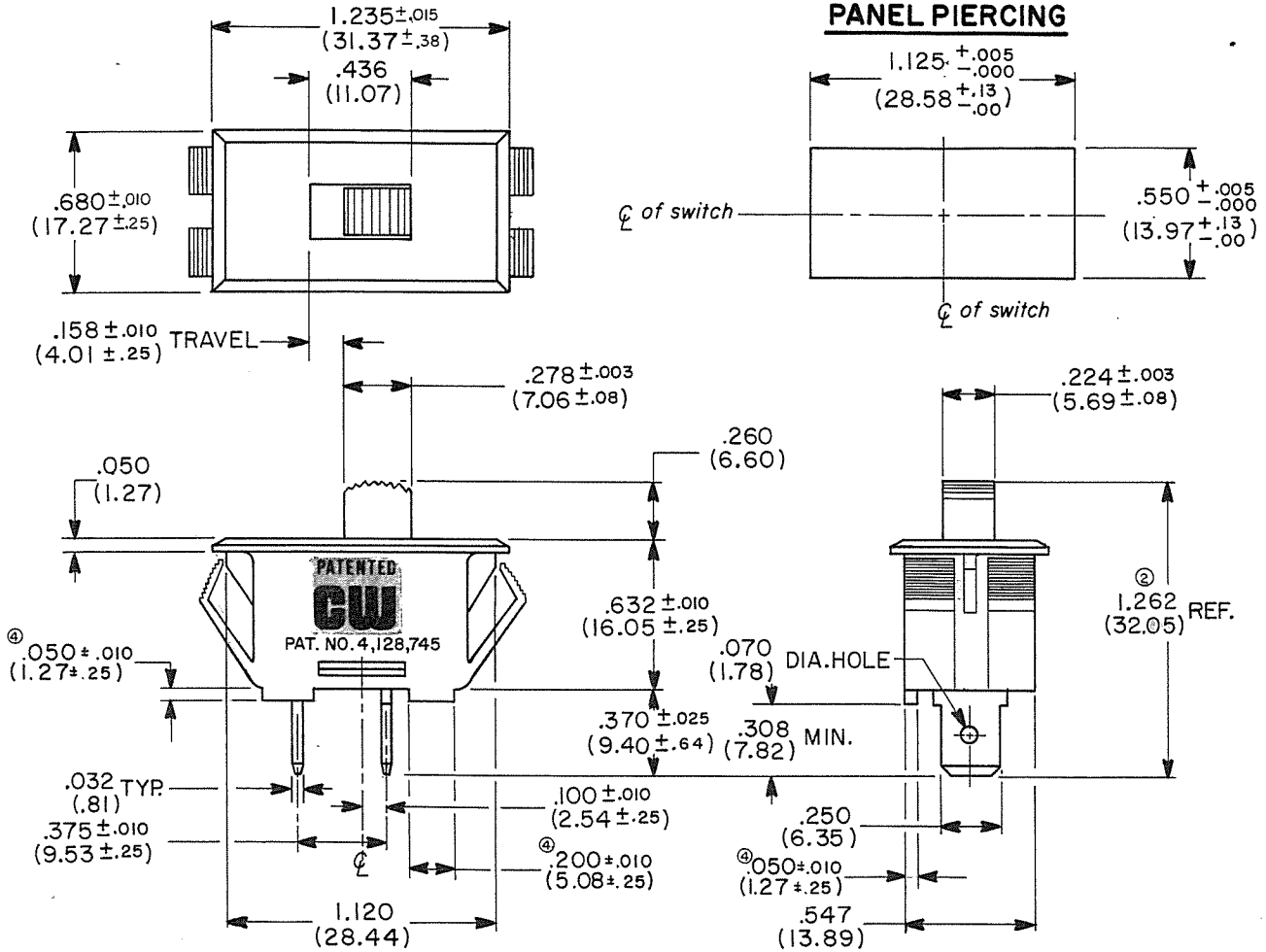

REVISIONS		
0		
1	REVISED LEGS B.D. 7-8-85	
2	1.252 WAS 1.257 B.D. 7-22-86	
3	.308 WAS 310. .370±.025 WAS .360±.015. deleted .300, n.m. 10-2-86.	
4	ADDED TABS AND DIM. MAW 11-3-89	

ATTENTION
THIS DRAWING AND ITS ATTACHMENT, IF ANY, ARE PROPRIETARY TO CW INDUSTRIES AND DESCRIBE DESIGNS THAT ARE CONFIDENTIAL AND MUST NOT BE DISCLOSED UNLESS AUTHORIZED, IN WRITING, BY AN OFFICER OF CW INDUSTRIES.....

CW INDUSTRIES
Southampton, Pa. 18966

TOLERANCES UNLESS OTHERWISE SPECIFIED

	METRIC
2 Place decimal ±.010	1 Place dec. ±.25MM
3 Place decimal ±.005	2 Place dec. ±.13MM
Angles . . . . . ±1°	

Made for CW
Drawn by K.GOGOLIN 7-12-82
Checker
Eng. appr. 7-12-82

SNAP IN
SLIDE SWITCH
ASSEMBLY
S.P.S.T.

Division SWITCH

Drawing Number
G-2011-0000

DELAWARE VALLEY REPRODUCTION CO. N15059

MASTER