DIMENSIONS IN INCHES (MILLIMETERS)
DO NOT SCALE DRAWING .....

Dwg. No. G-168S-0053

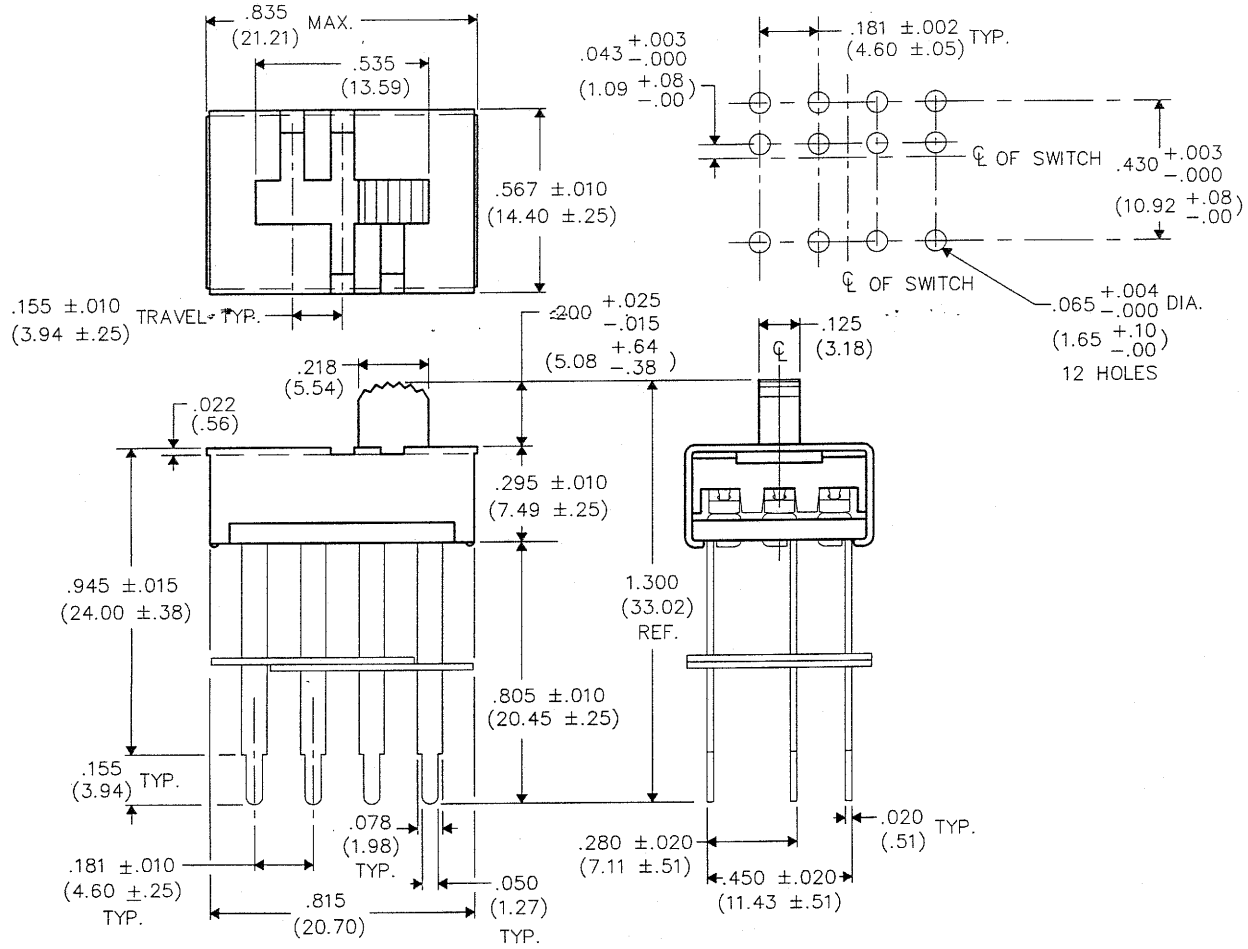

B-FORMAT 2002

REVISIONS

0	RELEASED. DGW	3-01-2006 MAR 10 2006

PDF File Mode

CW INDUSTRIES
Southampton, Pa. 18966

TOLERANCES UNLESS OTHERWISE SPECIFIED

	METRIC
2 Place Decimal ±.010	
3 Place Decimal ±.005	1 Place Dec. ±.25mm
Angles ..... ±1°	2 Place Dec. ±.13mm

Made for: CW IND.
Drawn by: DGW 3-01-2006
Checked by: G. Guld 3-8-06
Approval: [illegible] 3-16-6

Title: SLIDE SWITCH ASSEMBLY 3P/3P

Division: SWITCH

Dwg. No. G-168S-0053