DIMENSIONS IN INCHES (MILLIMETERS)
DO NOT SCALE DRAWING .....

Dwg. No. G-175-0001

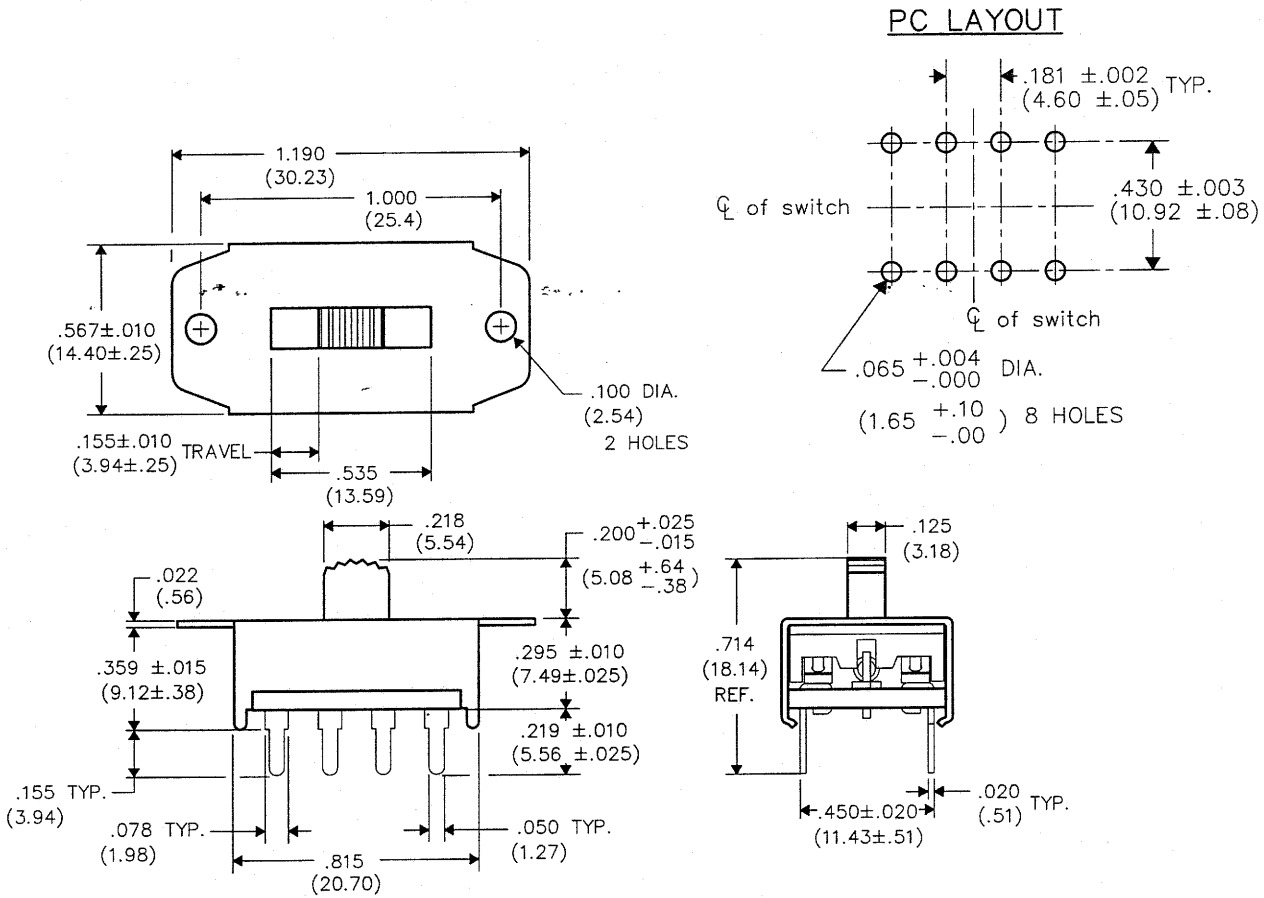

1	2	3	4	5	6	7	8	9	10

B-FORMAT 2002

REVISIONS

0 RELEASED. DGW 1-17-2006 JAN 31 2006

PDF FILE MADE

CW INDUSTRIES
Southampton, Pa. 18966

TOLERANCES UNLESS OTHERWISE SPECIFIED

	METRIC
2 Place Decimal ±.010	1 Place Dec. ±.25mm
3 Place Decimal ±.005	2 Place Dec. ±.13mm
Angles ..... ±1°	

Made for: CW IND.
Drawn by: DGW 1-17-2006
Checked by: G. Guld 1/31/05
Approval: [illegible] 1/31/6

Title: SWIDGET D.P. -3 POS. SR

Division: SWITCH

Dwg. No. G-175-0001